Velocity-MH
5G Outdoor CPE

Quick Start Guide

1 Device Overview

Your device is for outdoor use. Computer, router or switch can be connected to the device to access the 5G/4G/3G Internet.

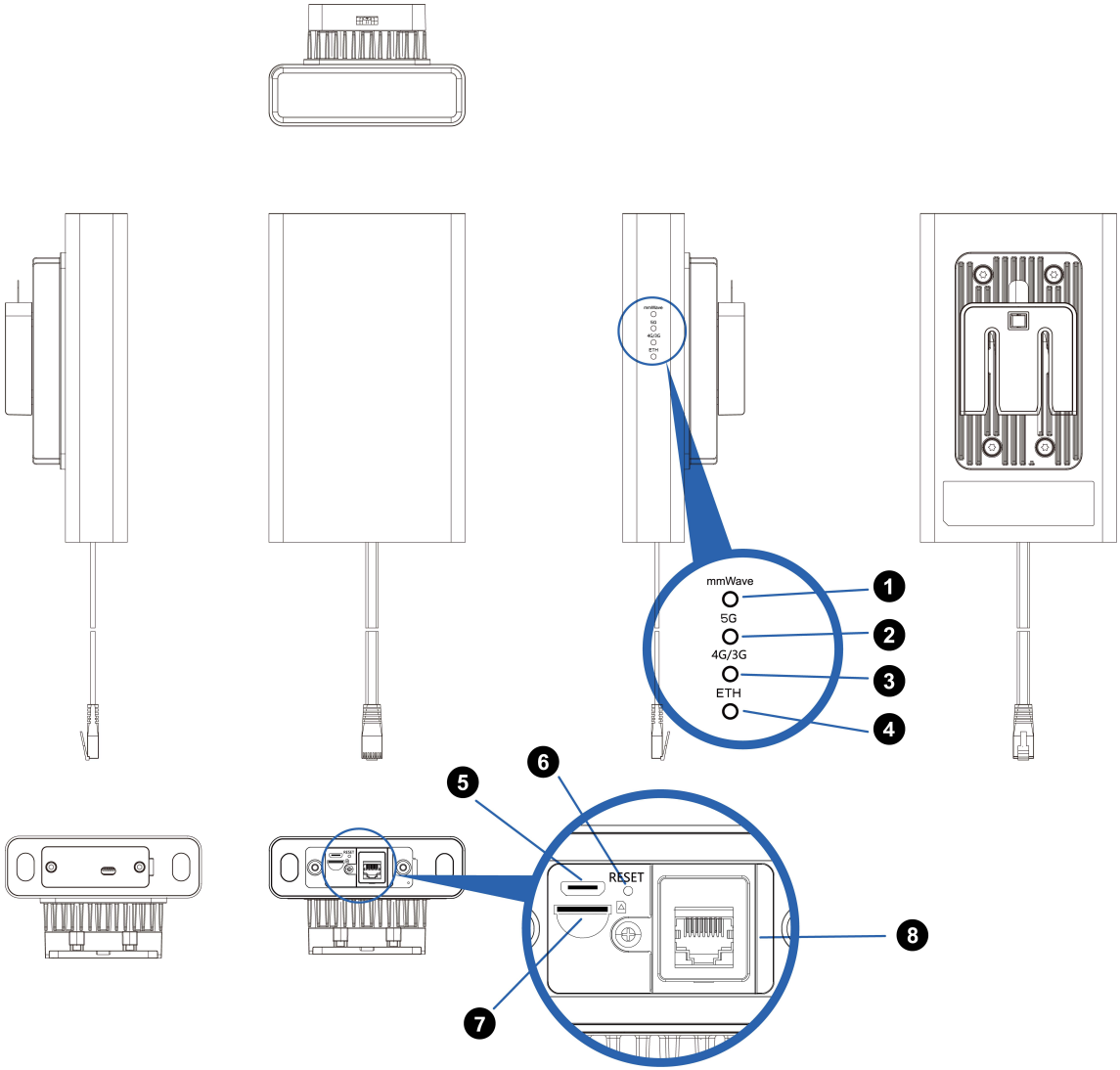

1. mmWave Indicate LED
2. 5G Indicate LED
3. 4G/3G Indicate LED
4. Ethernet Port Indicate LED
5. Micro-USB Port
6. Reset Button
7. Standard Nano-SIM Card Slot
8. POE Port

Note: The pictures in the document are used to guide users to install/use, and may differ from the actual product. The specific details shall be based on the actual product.

The LED indicators display the router's status.

Item	Status	Description
mmWave LED	Green Steady	Registered to mmWave network.
	Off	Not registered to network or during boot up.
5G LED	Blue Steady	Strong 5G signals and have no dial up.
	Blue Blinking	Strong 5G signals and dial up success.
	Green Steady	Medium 5G signals and have no dial up.
	Green Blinking	Medium 5G signals and dial up success.
	Yellow Steady	Weak 5G signals and have no dial up.
	Yellow Blinking	Weak 5G signals and dial up success.
	Red Steady	During boot up or not registered to network.
	Off	Registered to 4G/3G network and have no registered to 5G network in NSA mode or power off.
4G/3G LED	Blue Steady	Strong 4G/3G signals and have no dial up.
	Blue Blinking	Strong 4G/3G signals and dial up success.
	Green Steady	Medium 4G/3G signals and have no dial up.
	Green Blinking	Medium 4G/3G signals and dial up success.
	Yellow Steady	Weak 4G/3G signals and have no dial up.
	Yellow Blinking	Weak 4G/3G signals and dial up success.
	Red Steady	During boot up or not registered to network.
	Off	Registered to 5G network in SA mode or power off.
ETH LED	Green Steady	Connect to Ethernet network or PC.
	Green Blinking	Data transmitting.
	Off	Not connect to Ethernet network or PC.

Note: It's suggested to select a location with best signal quality to install (strong 5G/4G/3G signals).

2 Installation Materials and Tools

Prior to installation, verify against the packing list that all items are present and intact.
Contact your supplier if anything is missing or damaged.

No.	Description	Qty.
1	5G Outdoor CPE	1
2	Accessories	1
3	Anchoring screws	1
4	Hose clamp	1

No.	Description	Qty.
5	Ethernet cable	1
6	Power adapter	1
7	Quick Start Guide	1

If you need to install mounting kits on wood materials, prepare screws (recommended model: ST4.2 with length ≥ 25 mm).

An outdoor Ethernet cable requires a PVC conduit and must be installed far away from the parapet and lightning strip (recommended distance: more than 0.5 m).

If an Ethernet cable is routed within a street lamp pole, no PVC conduit is required.

3 Installing the SIM Card

Your ODU only supports the nano-SIM card. You can get a standard nano-SIM card from your service provider.

a. Follow the instructions as below to install the SIM card:

b. Use a hexagon bar to open the SIM Card cover.

c. Insert the SIM card into card slot in the correct position.

d. Use a hexagon bar to close the SIM Card cover.

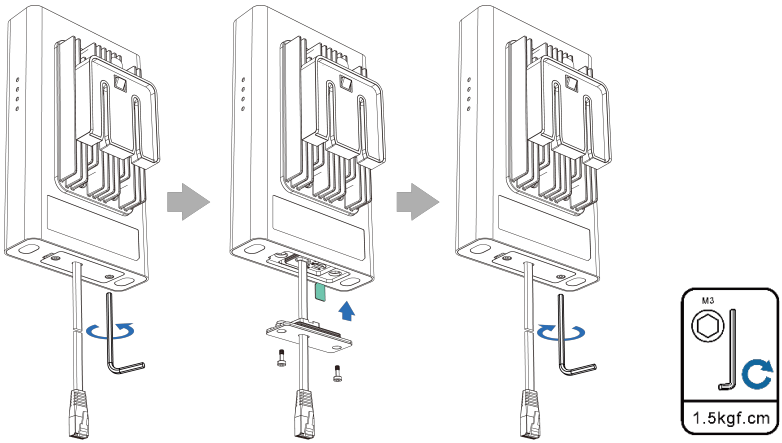

Note:

- Do not bend or scratch your SIM card, and avoid exposing the SIM card to static electricity, water or dirt.
- Tighten screws to prevent water from entering the ODU.

4 Application Scenario

Upon connecting the cables and powering on the device, internet access will be enabled on your PC.

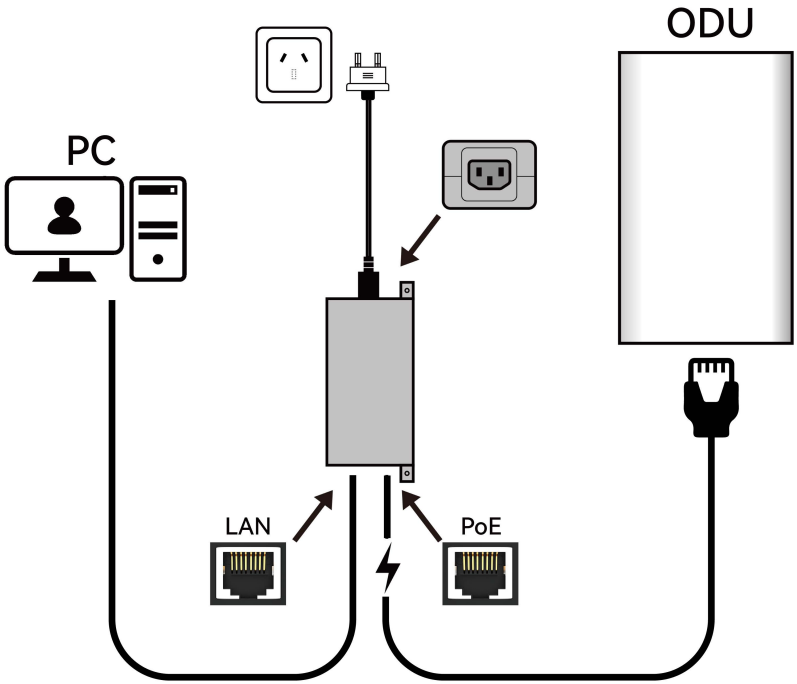

Note:

- The PoE interface only can be connected to the ODU. If the ODU is connected to another one, the customer's own ODU or computer network interface may be burned out.
- Use only the original PoE injector/power supply provided with this ODU. Using a third-party or non-matching PoE injector may result in hardware damage.
- Automatic IP address obtaining needs to be configured for PCs/user terminals.

⚠ CAUTION

- To ensure device safety and protect the warranty, the original PoE power module provided with the product must be used. Equipment failures caused by using third-party or incompatible power supplies will not be covered under the warranty.
- Cables must be routed vertically downward from the device interface naturally, with slack reserved. Bending the cable at a sharp 90-degree angle or securing it horizontally is strictly prohibited, as this may damage the waterproof seal and cause water ingress damage. Failures resulting from this are also excluded from the warranty.

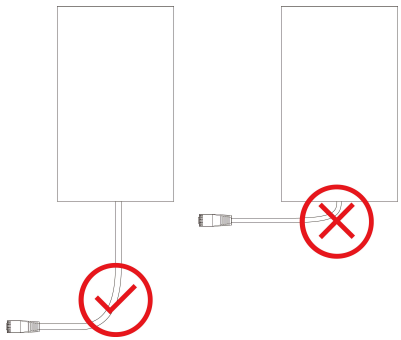

5 Installation

Installation scenario 1: **Mounting on the wall**

a. Align the base against the wall, use a level to calibrate the horizontal position of the mounting accessory, then mark the anchor point locations with a marker pen.

b. Use a ϕ5mm drill bit to drill holes at the anchor points, then install the M10 expansion bolts. Before installation, ensure that all debris inside the holes has been cleared. (The ϕ symbol indicates the hole diameter.)

c. Align the base with the wall surface and secure it to the wall using expansion bolts.

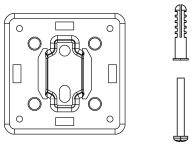

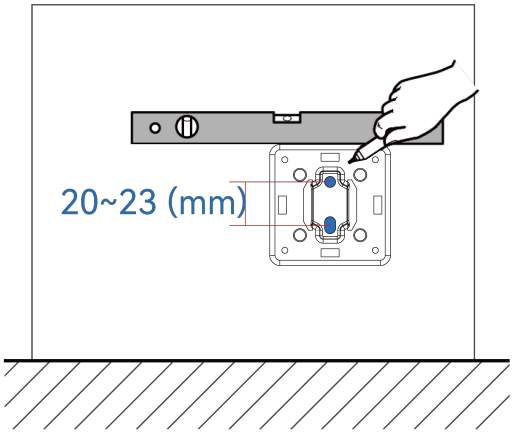

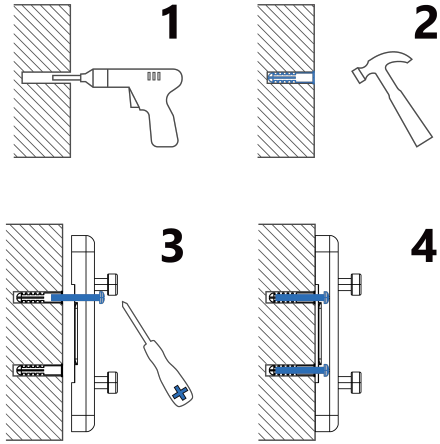

d. Align the mounting slot with the guide rail and press down. When you hear the click sound, the installation is in place. You can press the buckle on the mounting kits and pull the device up to remove it.

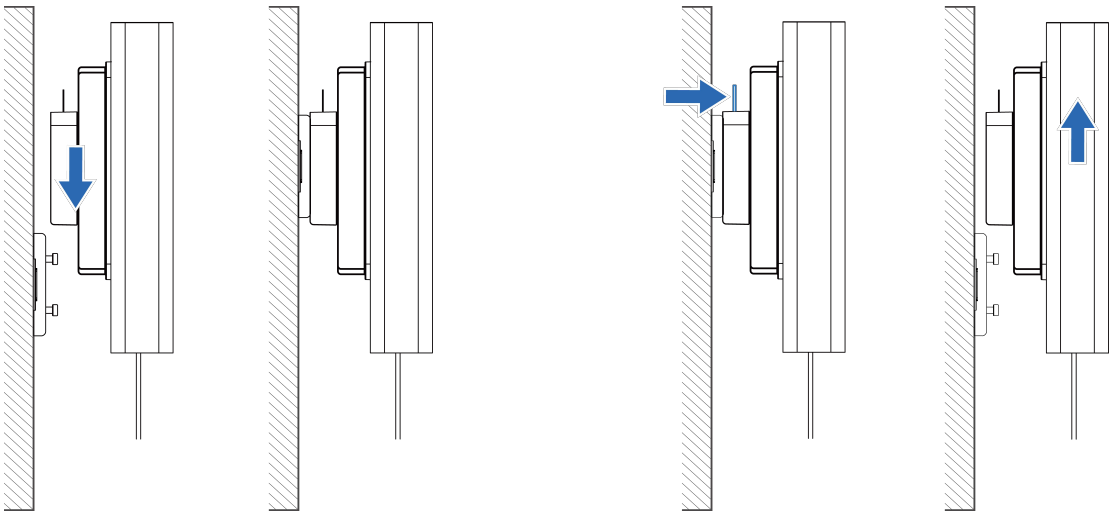

Installation scenario 2: **Mounting on a pole**

a. Pass the cable tie through the base, wrap it around the mounting pole, and thread it through the locking buckle for preliminary tightening. Then, use a hex key to fully tighten it to the specified torque (8kgf·cm).

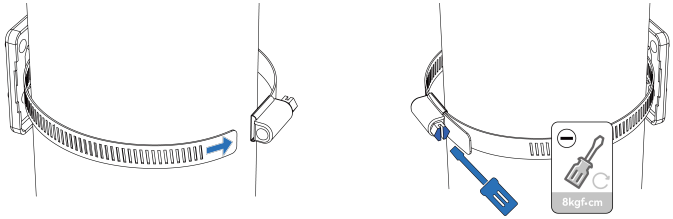

b. Align the mounting slot with the guide rail and press down. When you hear the click sound, the installation is in place. You can press the buckle on the mounting kits and pull the device up to remove it.

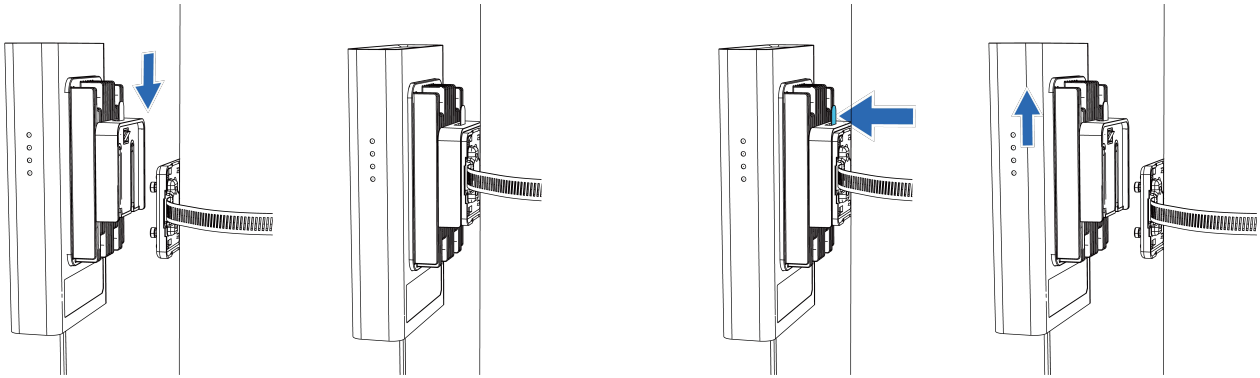

6 Configuration the Device via Website

a. Make sure your device, such as PC, is connected to the ODU via RJ45 cable.
b. Open your browser on the PC, and input http://192.168.1.1 in the address bar.
c. Enter username and password, and click “Login”, then you can access the WebUI. The administrator has the right to check and modify configuration permission.

Note:

- Due to regulations the default username and password should be obtained from your supplier.
- It’s strongly suggested to change the default login password of the GUI to prevent unauthorized users from changing the device’s settings.

IP address: **192.168.1.1**
User name: **Refer to your supplier**
Password: **Refer to your supplier**

7 Q&A

Q: What to do if there is no service?

A: The possible reasons are unstable network signal or a hardware problem.

You can try the following solutions:

a. If your device inside a building or near a structure that may be blocking the signal, change the position or location of the device. For example, try moving the device close to opposite direction.

b. Check the hardware for any loose parts or damage.

Q: What if my SIM card gets locked out?

A: If the SIM card is locked, log in to the GUI (http://192.168.1.1) and input the PIN or PUK code you received from your service provider.

Note: If you entered the incorrect PIN code 3 times, the PUK will be needed, and if the wrong PUK is entered 10 times, the SIM card will be locked permanently.

Q: Data connection failed.

A: You may be on a limited network coverage area, try to move to a different location or a better network coverage area.

Q: What If the device is not responsive?

A: You can try restoring the device to its default factory settings.

8 Safety Information

Before using and operating this device, read the following precautions carefully to ensure optimal device performance and avoid dangers or violation of laws and regulations.

Wireless Devices

Do not use this device in areas where the use of wireless devices is prohibited as it may interfere with other devices or present other hazards.

Impact on Medical Equipment

Radio waves generated by the device may interfere with the operation of implanted medical appliances or personal medical appliances, such as the pacemakers, cochlear implants, and hearing aids. If such appliances are used, consult the appliance manufacturer about the restrictions for using the device.

Areas with Inflammables and Explosives

- Do not use the device where inflammables or explosives are stored, for example, in a gas station, oil depot, or chemical plant. Otherwise, explosions or fires may occur. In addition, follow the instructions indicated in text or symbols.
- Do not store or transport the device in containers with flammable liquids, gases, or explosives.

Children Safety

Keep the device, its accessories, and plastic bags out of the reach of children. Otherwise, they may damage the device and its accessories by mistake, or they may swallow the small components of the device or put their heads into the plastic bags, causing suffocation or other dangerous situations.

Accessory Requirements

NOTE: The accessories of the device include the power adapter, cables, and mounting kits.
Use only the accessories supplied by the device manufacturer. Otherwise, the device may be faulty, fail, or even cause fires. Violating the warranty for the device or the laws and regulations related to telecommunications terminals may cause injuries.

Operating Environment

- Use the CPE at an ambient temperature of -40ºC to 50ºC An overly high or low ambient temperature may cause device faults.
- Use the CPE at an ambient humidity of 5%RH to 95%RH (non-condensing). An overly high or low ambient humidity may cause device faults.
- The power supply voltage must meet the requirements for the input voltage of the device.
- Keep the device away from appliances that generate strong electromagnetic fields, such as transformers or microwaves.
- When using the device indoors, avoid dusty, damp, or dirty environments. Using the device in these environments may result in circuit malfunctions.
- Keep the device stable to avoid personal injury or device damage.
- Keep the device away from heat sources, flammable materials, or exposed fire sources.
- Do not install the device in areas exposed to acidic, alkaline, or other corrosive gases.
- Keep the device and accessories in a well-ventilated area. Do not enclose or cover your device with towels or other objects. Do not place the device in a container with poor heat dissipation, such as a box or bag. Poor heat dissipation may damage the device.
- During thunderstorms, power off your device and remove all cables connected to it to protect against device faults or lightning strikes.
- Do not place any object (such as a candle or a water container) on the device to avoid risks caused by liquid leakage. If any foreign object or liquid enters the device, stop using the device immediately, power it off, remove all the connected cables, and then contact your operator.
- In the use of the device, do not touch the cable connectors.
- The device temperature increases after the device runs for a while. If the device is overheated, avoid prolonged contact. Otherwise, minor burn symptoms, such as red spots and darker pigmentation, may occur.
- Do not scratch or damage the device shell. Paint flaking or peeling may cause skin irritation or malfunction of the device. If paint flakes and peels drop into the host, a short circuit may occur.

Cleaning and Maintenance

- During storage, transportation, and operation of the device, keep it dry and prevent it from colliding with other objects.
- If the device is not going to be used for an extended period of time, power it off and remove all cables connected to it.
- Keep the power plug clean and dry to prevent electric shocks or other dangers.
- If any exception occurs, for example, if the device emits any smoke or unusual sound or smell, stop using the device immediately, power it off, remove all the cables connected to it, and then contact your operator.
- Do not step on, pull, or excessively bend any cable. Otherwise, the cable may get damaged, causing malfunction of the device.
- Do not use damaged or aged cables. Using such cables may cause electric shocks or fire hazards.
- Before cleaning or maintaining the device, stop using it, power it off, and then remove all cables connected to it.
- Do not place magnetic stripe cards, such as credit cards and phone cards, or floppy disks, near the device for extended periods of time. Otherwise, the magnetic stripe cards may be damaged or the stored data in the floppy disks may be lost.
- Clean the device shell with a soft, dry cloth. Do not use any chemical detergent, powder, or other chemical agents to clean the device.
- Do not modify the device's design, safety features, or performance without authorization.
- When using the CPE, observe all applicable laws and regulations and respect the legal rights of other people.

Environmental Protection

- Do not dispose of the device and its accessories in a garbage can.
- Dispose of the device according to the local regulations on disposing of packing materials and abandoned devices. Support proper collection and recycling.

RoHS for Environment Protection

This device complies with RoHS Directive 2011/65/EU and equivalent regulations in other countries.

RF Exposure Information

This device meets the EU requirements and the International Commission on Non-Ionizing Radiation Protection (ICNIRP) on the limitation of exposure of the general public to electromagnetic fields by way of health protection. This device should be installed

and operated with a minimum of 40cm spacing to any person at all times.

CE Declaration of Conformity

Hereby, Pacewave Pty Ltd declares that this radio equipment is in compliance with Directive 2014/53/EU.The full text of the EU declaration of conformity is available at the following internet address:
www.pacewace.com.au/products/devices/velocity_mh/doc.html

CE

For the full text of the EU declaration of conformity. This product can be used across EU member states.

WEEE Recycling:

This product should not be treated as household waste, instead it should be handed over to the applicable.
CAUTION: Risk of explosion if battery is replaced by an incorrect type. Dispose of used batteries according to the instructions.

Frequency Bands and Power

Frequency bands in which the radio equipment operates: Some bands may not be available in all countries or all areas and/or may not be certified for use in all markets. Please contact your supplier for details specific to your jurisdiction.

5G NR:

n1/n3/n5*/n7/n8/n20/n28/n38: 23dBm
n40/n41/n77/n78/n79: 26dBm
n257/n258: 43dBm

4G LTE:

B1/B3/B5*/B7/B8/B18*/B19*/B20/B28/B32/B34/B38/B39*/B40/B42: 23dBm
B41: 26dBm

3G WCDMA:

B1/B5/B8: 23dBm